Chemistry Journal
Vol. 1, No. 2, 2015, pp. 25-30
http://www.publicscienceframework.org/journal/cj

Wiener Polynomial of Hexagonal Mobius Molecular Graph

Yun Gao[1, *], Sainan Zhou[2], Wei Gao[3]

[1]Department of Editorial, Yunnan Normal University, Kunming, China
[2]Zhejiang Zhenyuan Pharmaceutical Co., Ltd, Shaoxing, China
[3]School of Information Science and Technology, Yunnan Normal University, Kunming, China

Abstract

Wiener polynomial is an important topological index in theoretical chemistry. Physical chemical properties of material are closely related to this polynomial. Hexagonal Mobius graphs are one type of molecular graphs embedded into the Mobius strip such that each face is a hexagon. In this paper, we obtain the Wiener polynomial of the two classes of hexagonal Mobius graphs. Furthermore, the λ-modified Wiener index, λ-modified Hyper-Wiener index, Harary index and Harary polynomial of the two classes of hexagonal Mobius graphs are determined.

Keywords

Chemical Graph Theory, Organic Molecules, Wiener Polynomial, Hexagonal Mobius Graph, Automorphism

Received: March 13, 2015 / Accepted: March 28, 2015 / Published online: March 30, 2015

1. Introduction

The Wiener polynomial, as an extension of Wiener index, is an important topological index in Chemistry. It is used for the structure of molecule. There is a very close relation between the physical, chemical characteristics of many compounds and the topological structure of that. The Wiener polynomial is such a topological index and it has been widely used in Chemistry fields.

The molecular graphs considered in this paper are simple and connected. The vertex and edge sets of G are denoted by $V(G)$ and $E(G)$, respectively. The Wiener index is defined as the sum of distances between all unordered pair of vertices of a graph G, i.e.,

$$W(G)=\sum_{\{u,v\}\subseteq V(G)} d(u,v),$$

where $d(u,v)$ is the distance between u and v in G.

The Wiener polynomial $W(G,x)$ is one of the recently distance-based graph invariants. That $W(G,x)$ clearly encodes the compactness of a structure and the $W(G,x)$ of G is define as:

$$W(G,x)=\sum_{\{u,v\}\subseteq V(G)} x^{d(u,v)}.$$

Some conclusions for Wiener related index and other chemical index can refer to [1-5]. Pan [6] deduced the formula of Wiener number and Hyper-Wiener number of two types of polyomino systems. Tang [7] studied the Wiener indices of unicycles graphs. Firstly，it gave a formulation for calculating the Wiener index of an unicycles graphs according its struction. And then, in terms of this formulation, it characterized the graphs with the largest, the smallest, the second largest, the second smallest, the third largest and the third smallest Wiener indies among all the unicycles graphs. Xing et al., [8] determined the n-vertex unicyclic graphs of cycle length r with the smallest and the largest Hyper-Wiener

* Corresponding author
E-mail address: gaoyun@ynnu.edu.cn (Yun Gao)

indices for $3 \le r \le n$, and the n-vertex unicyclic graphs with the smallest, the second smallest, the largest and the second largest Hyper-Wiener indices for $n \ge 5$. Yuan [9] learned the special class of unicyclic graph. Feng et al., [10] determined the extremal bicyclic graphs with maximal and minimal hyper-Wiener index. Chen [11] investigated the properties of the Wiener index of unicyclic graphs, which are used to give a lower bound for the Wiener index of unicylic graphs of order 2β having perfect matching. Moreover, all extremal unicyclic graphs which attain the lower bound were characterized. Qi and Zhou [12] determined the minimum Hyper-Wiener index of unicylic graphs with given number of vertices and matching number, and characterized the extremal graphs. Feng and llic [13] presented sharp bounds for the Zagreb indices, Harary index and hyper-Wiener index of graphs with a given matching number, and we also completely determine the extremal graphs. Also, Du and Zhou [14] determined the minimum Wiener indices of trees and unicyclic graphs with given number of vertices and matching number respectively, and the extremal graphs are characterized.

The λ-modified Wiener index of molecular graph is denoted as

$$W_\lambda(G) = \sum_{\{u,v\} \subseteq V(G)} d(u,v)^\lambda ,$$

where λ is some real number and $\lambda \ne 0$.

In order to further measure the topological structure of molecular graphs, Xi and Gao [15] combine the concept of Hyper-Wiener index and λ-modified Wiener index. For certain fixed real number λ ($\lambda \ne 0$), the λ-modified Hyper-Wiener index is defined as

$$WW_\lambda(G) = \frac{1}{2}\left(\sum_{\{u,v\} \subseteq V(G)} d(u,v)^\lambda + \sum_{\{u,v\} \subseteq V(G)} d(u,v)^{2\lambda} \right).$$

Harary index is another distance-based index defined by

$$H(G) = \sum_{\{u,v\} \subseteq V(G)} \frac{1}{d(u,v)}.$$

Furthermore, Harary polynomial of a molecular graph G is denoted as

$$H(G,x) = \sum_{\{u,v\} \subseteq V(G)} \frac{1}{d(u,v)} x^{d(u,v)}.$$

Let $G=(V, E)$ and $H=(V', E')$ be two graphs. $G \times H$ is a such graph, its vertex set is $V \times V'$, there exist an edge between (a, x) an (b, y) if and only if one of following condition holds: (1) $ab \in E$ and $x=y$; (2) $a=b$ and $xy \in E'$. Let $V(P_k)=\{0,1,\cdots,k\text{-}1\}$. The hexagonal Mobius graph with length $2k$ and width 2 denoted by $H_{2,2k}$ is defined as follows: deleting edges $\{(0, 2j+1)\ (1, 2j+1) | 0 \le j \le k\text{-}1\}$ from $P_2 \times P_{2k}$, then adding edges $(1,0)(0,2k\text{-}1)$ and $(0,0)(1,2k\text{-}1)$. The hexagonal Mobius graph with length $2k+1$ and width 3 denoted by $H_{3,2k+1}$ is defined as follows: deleting edges $\{(0, 2j)\ (1, 2j) | 0 \le j \le k\}$ from $P_3 \times P_{2k+1}$, then adding edges $(0,0)(2,2k)$, $(1,0)(1,2k)$ and $(2,0)(0,2k)$.

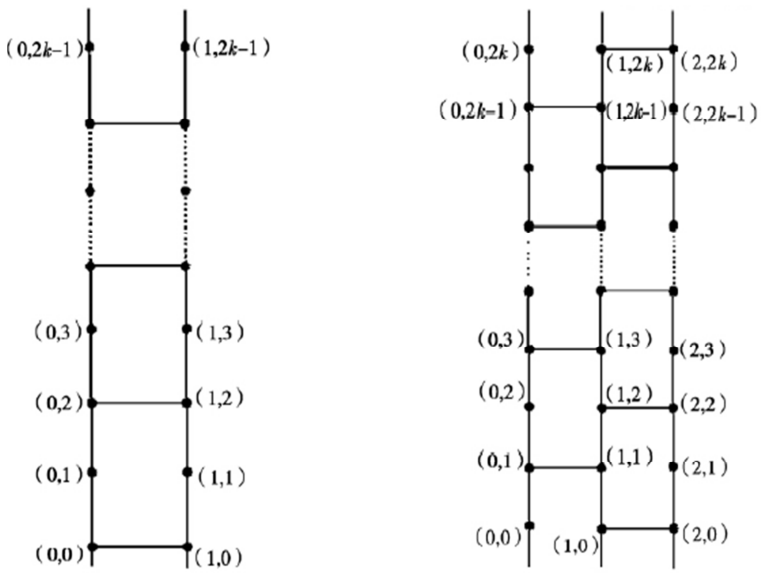

Fig. 1. $H_{2,2k}$ and $H_{3,2k+1}$

In this paper, we determine the Wiener polynomial of above two hexagonal Mobius graphs. As a supplement, the λ-modified Wiener index, λ-modified Hyper-Wiener index, Harary index and Harary polynomial of the two classes of hexagonal Mobius graphs are presented.

2. Main Results and Proof

Theorem 1. $W(H_{2,2k},x)=\begin{cases}5x+x^2, & k=1\\ 10x+16x^2+2x^3, & k=2\\ k(8\sum_{i=1}^{k}x^i-x^2+x^3-x), & k\geq 3\end{cases}$.

Proof. When k=1 and k=2, $H_{2,2}$ and $H_{2,4}$ are isomorphism to following graphs (see Fig. 2.), respectively. By the definition of Wiener polynomial and directly computing, we have $W(H_{2,2},x)=5x+x^2$ and $W(H_{2,4},x)=10x+16x^2+2x^3$.

When $k\geq 3$, the vertices of $H_{2,2k}$ have two orbits under its automorphism group, and all the $2k$ vertices with degree 2 in one orbit and all the $2k$ vertices with degree 3 in the other orbit.

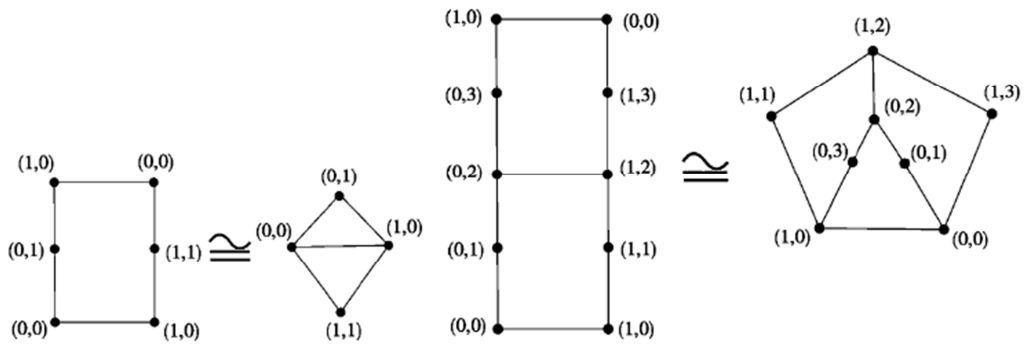

Fig. 2. The graphs isomorphism to $H_{2,2}$ and $H_{2,4}$, respectively.

• Taking any vertex v with degree 2, the sum of polynomial from v to other vertex is calculated by (see left graph of Fig. 3.)

$$2\times 2(x^1+x^2+\cdots+x^k)-x^2+x^3=4\sum_{i=1}^{k}x^i-x^2+x^3.$$

• Taking any vertex v with degree 3, the sum of polynomial from v to other vertex is calculated by (see right graph of Fig. 3.)

$$2\times 2(x^1+x^2+\cdots+x^k)-x^1=4\sum_{i=1}^{k}x^i-x.$$

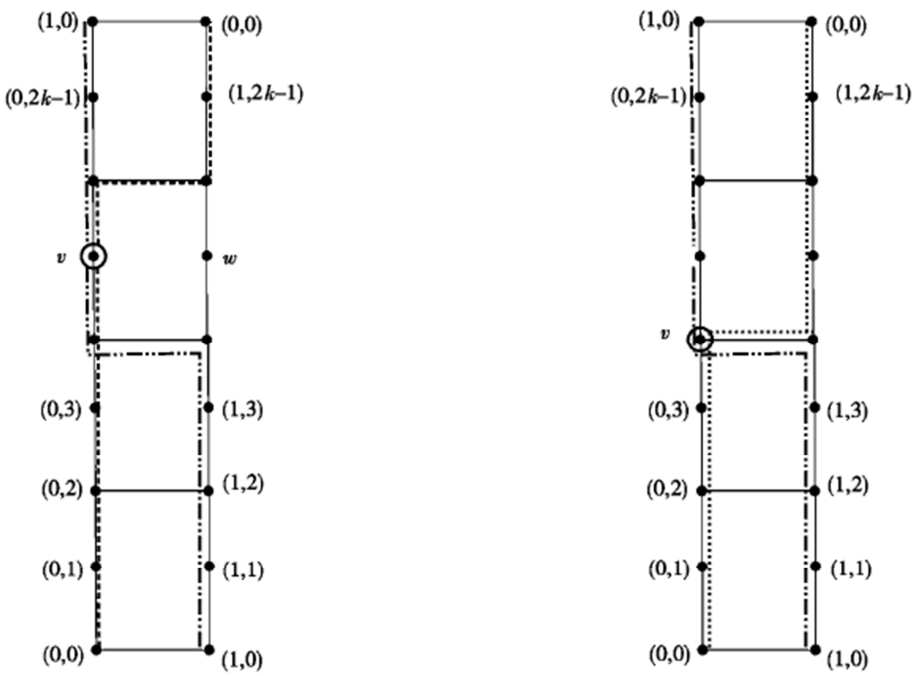

Fig. 3. Distance computing by taking any vertex with degree 2 or 3 from $H_{2,2k}$ respectively.

Hence, we infer

$$W(H_{2,2k},x)=\frac{1}{2}\{2k(4\sum_{i=1}^{k}x^i-x^2+x^3)+2k(4\sum_{i=1}^{k}x^i-x)\}=k(8\sum_{i=1}^{k}x^i-x^2+x^3-x).$$

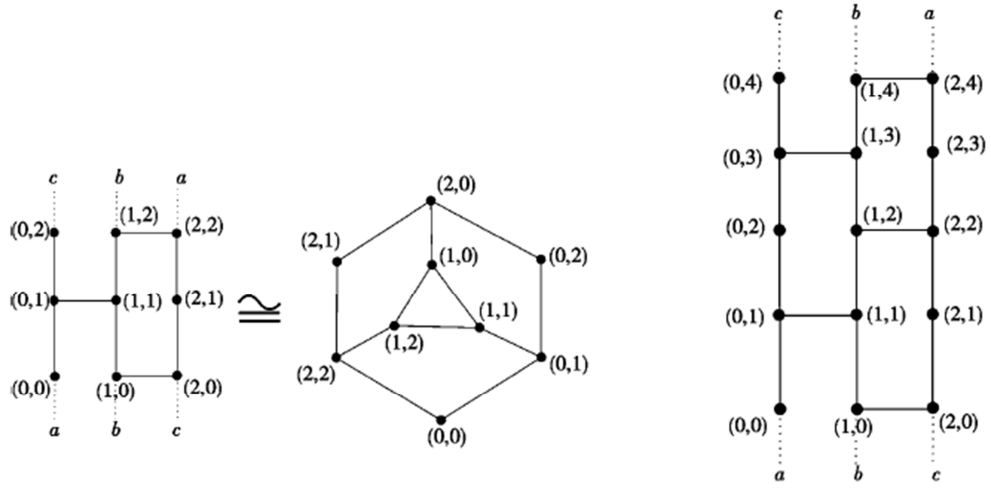

Fig. 4. The graph isomorphism to $H_{3,3}$ and the structure of $H_{3,5}$, respectively.

Theorem 2.

$$W(H_{3,2k+1},x)=$$

$$\begin{cases}12x+18x^2+6x^3, & k=1\\ 17x+21x^2+32x^3+16x^4+15x^5, & k=2\\ \frac{2k+1}{2}[18(x^1+x^2+\cdots+x^{(k+1)})-6x^1-5x^2+2x^4+2x^5+2x^k], & k\geq 3\end{cases}.$$

Proof. When k=1, $H_{3,3}$ is isomorphism to left graph of Fig. 4. By the definition of Wiener polynomial and directly computing, we have $W(H_{3,3},x)=12x+18x^2+6x^3$. When k=2, the structure of $H_{3,5}$ is showed in right graph of Fig. 4. We yield $W(H_{3,5},x)=17x+21x^2+32x^3+16x^4+15x^5$.

When $k\geq 3$, the vertices of $H_{3,2k+1}$ have three orbits under its automorphism group, and all the vertices with degree 2 and degree in boundary in the first and second orbit respectively, and all the inner vertices with degree 3 in the third orbit.

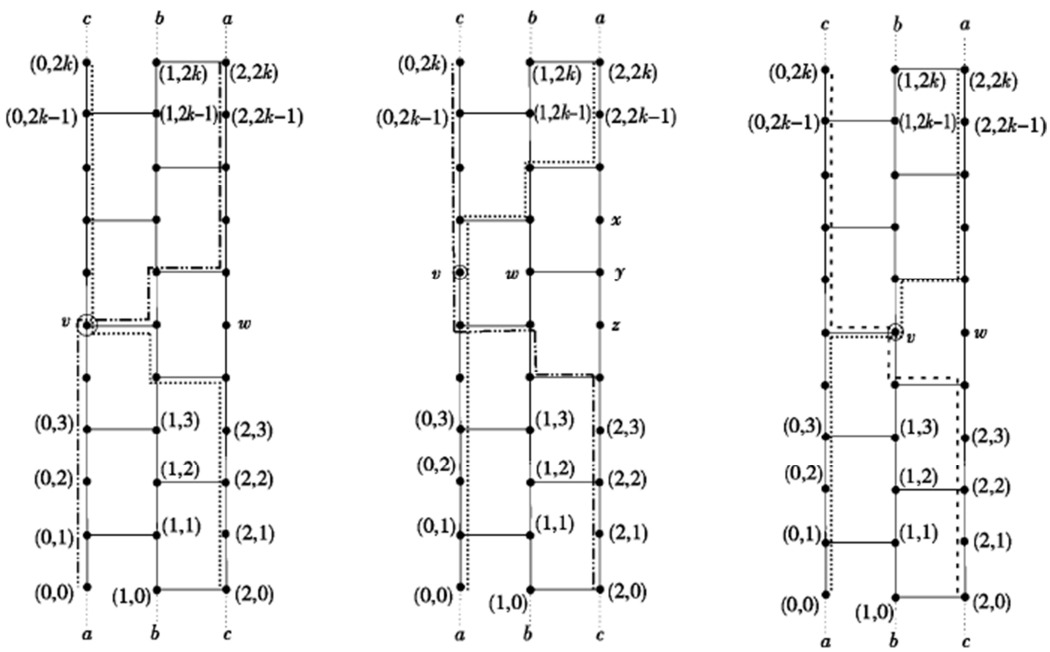

Fig. 5. Distance computing by taking any vertex from $H_{3,2k+1}$.

- There are $2k+1$ vertices with degree 3 in boundary. Taking any vertex v, the sum of polynomial from v to other vertex is calculated by (see middle graph of Fig. 5.)

$$\{2\times 2(x^1+x^2+\cdots+x^{(k+1)})-x^1\}+$$
$$\{2(x^1+x^2+\cdots+x^{(k+1)})-x^1\}-(x^2+x^1+x^2)+x^4$$
$$=6(x^1+x^2+\cdots+x^{(k+1)})-x^1-2x^2+x^4.$$

- There are $2k+1$ vertices with degree 2 in boundary. Taking any vertex v, the sum of polynomial from v to other vertex is calculated by (see left graph of Fig. 5.)

$$\{2\times 2(x^1+x^2+\cdots+x^{(k+1)})-x^2+x^3+x^4+x^5+x^5\}+$$
$$\{2(x^2+\cdots+x^{(k+1)})-(x^2+x^2+x^3+x^3)\}$$
$$=6(x^1+x^2+\cdots+x^{(k+1)})-2x^1-3x^2-x^3+x^4+2x^5.$$

- There are $2k+1$ inner vertices with degree 3. Taking any vertex v, the sum of polynomial from v to other vertex is calculated by (see right graph of Fig. 5.)

$$\{2\times 2(x^1+x^2+\cdots+x^{(k+1)})-x^1\}+$$
$$\{2(x^1+x^2+\cdots+x^k)-(x^1+x^1)\}+x^3$$
$$=6(x^1+x^2+\cdots+x^{(k+1)})-3x^1+2x^k+x^3.$$

Hence, we infer

$$W(H_{3,2k+1},x)=$$
$$\frac{2k+1}{2}[6(x^1+x^2+\cdots+x^{(k+1)})-x^1-2x^2+x^4+6(x^1+x^2+\cdots+x^{(k+1)})$$
$$-2x^1-3x^2-x^3+x^4+2x^5$$
$$+6(x^1+x^2+\cdots+x^{(k+1)})-3x^1+2x^k+x^3]$$
$$=\frac{2k+1}{2}[18(x^1+x^2+\cdots+x^{(k+1)})$$
$$-6x^1-5x^2+2x^4+2x^5+2x^k].$$

3. More Conclusions

In this section, according to the proof procedure presented in section 2, we obtain the following results on λ-modified Wiener index, λ-modified hyper-Wiener index, Harary index and Harary polynomial.

Theorem 3. $$W_\lambda(H_{2,2k})=\begin{cases}5+2^\lambda, & k=1\\ 10+16\cdot 2^\lambda+2\cdot 3^\lambda, & k=2\\ k(8\sum_{i=1}^{k}i^\lambda-2^\lambda+3^\lambda-1), & k\ge 3\end{cases}.$$

Theorem 4. $$WW_\lambda(H_{2,2k})=$$
$$\begin{cases}5+\frac{1}{2}(2^\lambda+2^{2\lambda}), & k=1\\ 10+8(2^\lambda+2^{2\lambda})+3^\lambda+3^{2\lambda}, & k=2\\ k(4\sum_{i=1}^{k}(i^\lambda+i^{2\lambda})-\frac{1}{2}(2^\lambda+2^{2\lambda})+\frac{1}{2}(3^\lambda+3^{2\lambda})-1), & k\ge 3\end{cases}.$$

Theorem 5. $$H(H_{2,2k})=\begin{cases}\frac{11}{2}, & k=1\\ \frac{56}{3}, & k=2\\ k(8\sum_{i=1}^{k}\frac{1}{i}-\frac{7}{6}), & k\ge 3\end{cases}.$$

Theorem 6.

$$H(H_{2,2k},x)=\begin{cases}5x+\frac{1}{2}x^2, & k=1\\ 10x+8x^2+\frac{2}{3}x^3, & k=2\\ k(8\sum_{i=1}^{k}\frac{1}{i}x^i-\frac{1}{2}x^2+\frac{1}{3}x^3-x), & k\ge 3\end{cases}.$$

Theorem 7. $$W_\lambda(H_{3,2k+1})=$$
$$\begin{cases}12+18\cdot 2^\lambda+6\cdot 3^\lambda, & k=1\\ 17+21\cdot 2^\lambda+32\cdot 3^\lambda+16\cdot 4^\lambda+15\cdot 5^\lambda, & k=2\\ \frac{2k+1}{2}[18(1+2^\lambda+\cdots+(k+1)^\lambda)-6-5\cdot 2^\lambda+2\cdot 4^\lambda+2\cdot 5^\lambda+2\cdot k^\lambda], & k\ge 3\end{cases}.$$

Theorem 8. $$WW_\lambda(H_{3,2k+1})=$$
$$\begin{cases}12+9(2^\lambda+2^{2\lambda})+3(3^\lambda+3^{2\lambda}), & k=1\\ 17+\frac{21}{2}(2^\lambda+2^{2\lambda})+16(3^\lambda+3^{2\lambda}) & \\ +8(4^\lambda+4^{2\lambda})+\frac{15}{2}(5^\lambda+5^{2\lambda}), & k=2\\ \frac{2k+1}{2}[9(2+2^\lambda+2^{2\lambda}+\cdots+(k+1)^\lambda+(k+1)^{2\lambda}) & \\ -6-\frac{5}{2}(2^\lambda+2^{2\lambda})+(4^\lambda+4^{2\lambda})+(5^\lambda+5^{2\lambda})+(k^\lambda+k^{2\lambda})], & k\ge 3\end{cases}.$$

Theorem 9.

$$H(H_{3,2k+1})=\begin{cases}29, & k=1\\ \frac{271}{6}, & k=2\\ \frac{2k+1}{2}[18(1+\frac{1}{2}+\cdots+\frac{1}{k+1})-\frac{38}{5}+\frac{2}{k}], & k\ge 3\end{cases}.$$

Theorem 10.

$$H(H_{3,2k+1},x)=\begin{cases}12x+9x^2+2x^3, & k=1\\ 17x+\frac{21}{2}x^2+\frac{32}{3}x^3+4x^4+3x^5, & k=2\\ \frac{2k+1}{2}[18(x^1+\frac{1}{2}x^2+\cdots+\frac{1}{k+1}x^{(k+1)}) & \\ -6x^1-\frac{5}{2}x^2+\frac{1}{2}x^4+\frac{2}{5}x^5+\frac{2}{k}x^k], & k\geq 3\end{cases}.$$

Acknowledgements

We thank the reviewers for their constructive comments in improving the quality of this paper. This work was supported in part by the National Natural Science Foundation of China (11401519).

References

[1] W. Gao, L. Liang, Y. Gao, Some results on wiener related index and shultz index of molecular graphs, Energy Education Science and Technology: Part A, 2014, 32(6): 8961-8970.

[2] Wei Gao, Li Shi, Wiener index of gear fan graph and gear wheel graph, Asian Journal of Chemistry, 2014, 26(11): 3397-3400.

[3] W. Gao, L. Liang, Y. Gao, Total eccentricity, adjacent eccentric distance sum and Gutman index of certain special molecular graphs, The BioTechnology: An Indian Journal, 2014, 10(9): 3837-3845.

[4] Y. Gao, W. Gao, L. Liang, Revised Szeged index and revised edge Szeged index of certain special molecular graphs, International Journal of Applied Physics and Mathematics, 2014, 4(6): 417-425.

[5] W. Gao, W. F. Wang, Second atom-bond connectivity index of special chemical molecular structures, Journal of Chemistry, Volume 2014, Article ID 906254, 8 pages, http://dx.doi.org/10.1155/2014/906254.

[6] Y. J. Pan, Wiener number and hyper-wiener number of two types of polyomino systems, Journal of Mathematical Study, 2013, 46(3): 260-269.

[7] Z. K. Tang, The Wiener indices of unicyclic graphs, Master thesis of Hunan Normal University, 2006.

[8] R. D. Xing, B. Zhou, X. L. Qi, Hyper-Wiener index of unicyclic graphs, MATCH Commun. Math. Comput. Chem., 2011, 66: 315-328

[9] H. Yuan, On the Hyper-Wiener index of unicyclic graphs, Journal of Mathematical Study, 2013, 26(2): 142-150.

[10] L. H. Feng, W. J. Liu, K. X. Xu, The hyper-Wiener index of bicyclic graphs, Manuscript.

[11] Y. H. Chen, The Wiener Index of Unicyclic Graphs with Perfect Matching, Journal of Shanghai Jiaotong University, 2010, 44(6):844-848.

[12] X. L. Qi, B. Zhou, On the hyper-Wiener index of unicyclic graphs with given matching number, Stud. Univ. Babes-Bolyai Math., 2012, 57(4): 459-468.

[13] L. H. Feng, A. llic, Zagreb, Harary and hyper-Wiener indices of graphs with a given matching number, Applied Mathematics Letters, 2010, 23(8):943-948.

[14] Z. B. Du, B. Zhou, Minimum Wiener indices of trees and unicyclic graphs of given matching number, MATCH Commun. Math. Comput. Chem., 2010, 63:101-112.

[15] W. F. Xi, W. Gao, λ-Modified extremal hyper-Wiener index of molecular graphs, Journal of Applied Computer Science & Mathematics, 2014, 18 (8): 43-46.